RENSON®

Creating healthy spaces

Fixscreen®

Fixscreen® 85
Fixscreen® 100*EVO*
Fixscreen® 150

THE ORIGINAL

patented technology

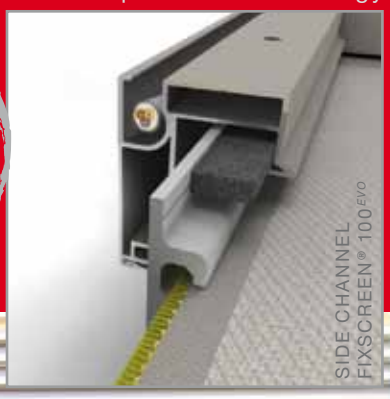

HEALTHY® DOMESTIC CONCEPT — DOMESTIC USE

HEALTHY® BUILDING CONCEPT — PROJECT USE

Introduction

Fixscreen® RENSON® HQ, Waregem (BE), Arch.: J. Crepain

The need for sun protection

A sun-oriented building or one with large windows on the south-side has many benefits. During the autumn, winter and spring, you can enjoy all of the benefits of the incoming rays of sunshine. In the summertime, though, the building can be susceptible to overheating and occupants may experience uncomfortable light refractions.

Structural sun protection systems and screens are used to help protect the building from overheating and to block the sunrays before they hit the glass surfaces. The unwanted heat and the disturbing glare does not get inside. There is no chance of people being blinded or having to deal with unpleasant reflections on the TV or computer monitors, yet you still maintain visual contact with the environment outside. The outdoor view is important and our products respect that.

KYOTO protocol

Many developed countries have now signed the Kyoto protocol. People are becoming more aware of the growing dangers human impact will have on our planet and how it will affect our climate in particular. In order to control these changes and to reduce the Greenhouse Effect, energy consumption must be decreased.

Cooling buildings is a major energy-consuming activity. In order to reduce or in some cases completely eliminate the need for cooling, efficient sun protection can be used.

Several governments have already taken steps related to energy consumption and ventilation.

- Belgium: Regulations concerning Energy Performance & Indoor Climate (EPB)
- Netherlands: Energy Performance Coefficient (EPC)
- France: Réglement Thermique 2005 (RT2005)
- Germany: Energy savings regime
- Great Britain: Approved Document L2 'Conservation of fuel and power in buildings other than dwellings'

ICARUS® RENSON® HQ, Waregem (BE), Arch.: Jo Crepain, photo : Nike Bourgeois

Fixscreen® RENSON® HQ, Waregem (BE), Arch.: Jo Crepain

The Fixscreen® was developed by RENSON® Sun protection-Screens and is the first external screen in the world that is truly wind tight.

Thanks to an ingenious zip system, the fabric is wind tight in every position and can be insect-proof in the closed position. It is a simple principle by which the sun-protecting fabric has a special trim with a symmetrical zip which holds the entire structure firmly in the two side channels.

Fixscreen®, the technological performer in terms of comfort and ease of use, can be used in residential, offices and project buildings.

Fixscreen® has a full range of wind-tight screens.

Fixscreen® 85 was developed for dimensions of 2.50 was developed for dimensions of 2.50 m (width) by 1.80 m (height) (up to max. 4.50 m²). It is possible to join them up to dimensions of 5.00 m (width) by a maximum of 1.80 m (height).
This small screen is important for the 'standard window' and the renovation market.

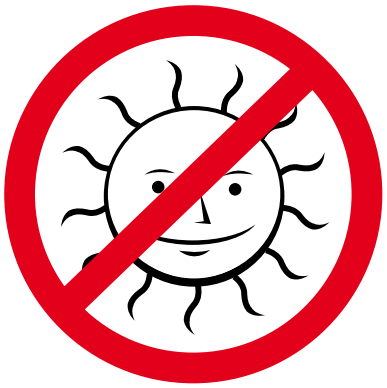

Fixscreen® 100*EVO* was developed for dimensions up to 4.00 m (width) by 2.70 m (height) or 3.00 m (width) by 3.50 m (height) (up to 10.8 m²).
It is possible to join them up to dimensions of 6.00 m (width) by a maximum of 2.70 m (height).
New!Patented & CE-approved Connect&Go technology

Fixscreen® 150 can handle unique dimensions up to 6.00 m width or 6.00 m height (up to 22 m²).

The extensive range of colours of the fabrics and the profiles ensures that the Fixscreen® is in perfect harmony with the architecture of your home or company, which automatically leads to a pleasant living and working environment.
All materials used for the Fixscreen® are 100% corrosion-proof. Only stainless steel screws have been used. The aluminium profiles consist of an alloy EN AW-6063 T66. The profiles are available in every possible colour.

Benefits of Fixscreen®

The intelligent zip system of the Fixscreen® guarantees:

A wind-tight screen

The Fixscreen® is compliant with European standard EN13561 (Wind Resistance class 3).
Flapping and torn fabric are a thing of the past.

No wrinkling

The zip technology guarantees a smooth and wrinkle-free fabric.

Control over light

Fixscreen® blocks the sunrays before they come into contact with glass surfaces. There is no chance of blinding or unpleasant glare. And you still maintain visual contact with the environment outside. The outdoor view is important and we respect that. Depending on the type of fabric selected, different degrees of translucence are possible.

Control over heat and energy

Specially designed to protect the building from the sun's energy and to achieve an optimal indoor climate. The Fixscreen® helps to avoid overheating by making sure the unwanted heat does not get inside. This can save a lot of money on cooling and air-conditioning during the summer and in the winter can be controlled to let in the optimum amount of light whilst reducing glare. Depending on the type of fabric selected, different degrees of heat-resistance are possible.

Insect-proof

Intensive ventilation is possible without insects getting a chance to invade your home. There is no opening between the side channel and the screen plus the bottom bar with a darkening strip ensures a seamless connection with the sill.

Silent operation

We guarantee a bottom bar without the banging noise.

Easy to operate

Manual or electric operation.

Easy maintenance

Fixscreen® does not require much maintenance.

Easy installation

Installation for the window or on the wall (mounting). Also possible on the window with or without roller blind encased with mounting braces (built-in).
The Connect&Go technology is available with the Fixscreen 100^{EVO}. This simplifies the assembly and disassembly of the fabric roller barrel, the motor and the fabric. This new technology also makes it possible to easily secure the headbox.

Large dimensions up to 22 m^2

Fixscreen® 150 is suitable for dimensions of 6 m wide or 6 m high (up to 22 m^2).

Technical specifications for Fixscreen®

Wind-tight screen

Wind tested

Wind tunnel testing by the Von Karman Institute for Fluid Dynamics. Wind tunnel test report from the Von Karman Institute (no. EAR0410). Tests carried out up to 150 km/h.
Fixscreen® of 2000 x 2000 mm has no problems in winds up to 120 km/h (see Beaufort scale).

Fixscreen® 120 km/h

Standard screen 30 km/h

The result: the sun-protection fabric must be taken in at wind speeds greater than 80 km/h
Guaranteed up to 80 km/h when closed.

Beaufort scale

Beaufort	Description	Average speed in m/s	Average speed in km/h	Consequences
0	Calm	< 0.2	< 1	You don't feel the wind. Smoke will rise virtually straight up.
1	Light air	0.3 - 1.4	1 - 5	Wind direction can be read from the smoke plume, but not from the weather vane.
2	Light breeze	1.5 - 3.4	6 - 12	Wind can be felt on the face, leaves rustle, the weather vane moves visibly with the wind.
3	Gentle breeze	3.5 - 5.4	13 - 19	Flags wave and leaves move about constantly
4	Moderate	5.5 - 7.4	20 - 27	Dust blown up causes problems for the eyes. Hair is awry.
5	Fresh breeze	7.5 - 10.4	28 - 37	Bushes rustle, white tops on lakes and canals.
6	Strong breeze	10.5 - 13.4	38 - 48	Umbrellas are difficult to hold on to, large branches sway, power lines hum
7	High wind to near gale	13.5 - 17.4	49 - 62	It is difficult walking against the wind. Trees sway.
8	Gale	17.5 - 20.4	63 - 73	Making headway is very difficult. Small branches break off.
9	Fresh gale	20.5 - 24.4	74 - 87	Chimney tops, roofing tiles and antennas blow away.
10	Whole gale	24.5 - 28.4	88 - 102	Adults blow over. Major damage to buildings.
11	Violent storm	28.5 - 32.4	103 - 117	Major damage to houses and forests.
12	Hurricane	> 32.5	> 118	Destruction

Source: Deutscher Wetterdienst (DWD) - Offenbach

Technical specifications for Fixscreen®

Pressure tests

Destructive test at the WTCB.
The wind resistance of the sun protection system is determined on the basis of a test in a wind tunnel in accordance with NBN EN 1932 version 2001.
The underpressures and overpressures are tested in the wind tunnel with the help of a fan and a system of electrically operated valves to create those pressures.
Durability test report of the WTCB (no. 651 XE823 CAR4139).

335 Pa

Max. 600 Pa

Results

Pressure was increased in steps from 50 Pa up to the limit of 600 Pa.
At pressure of 600 Pa, the zip was pulled from the side channel without tearing.

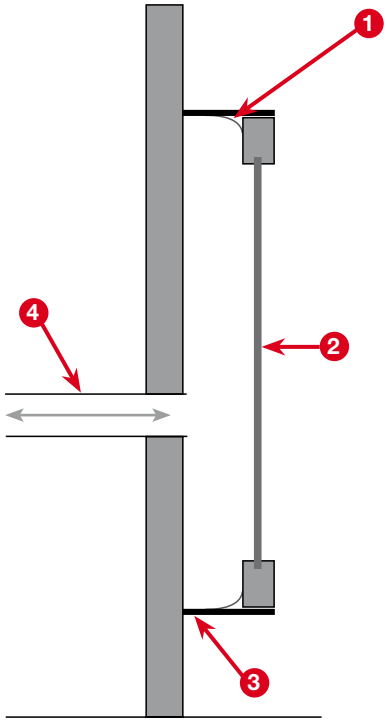

Vertical cross-section of the wind tunnel:

1. Seal
2. Sample
3. Wind frame
4. Connection to a fan (≥ 10 000 Pa) and measurement of the underpressure and overpressure

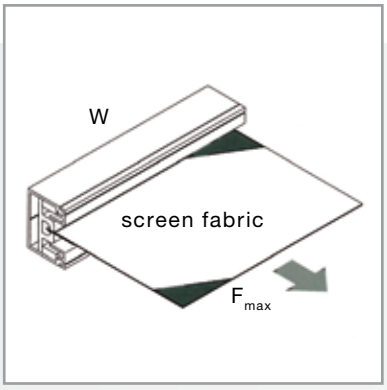

Test at tension

Allowed tension T_{max}

$T_{max} = F_{max} / W = 13.5$ (kg/cm)

Conditions:
- Fixscreen® symmetrical zip principle
- Aluminium side channel 34 mm
- PVC side channel

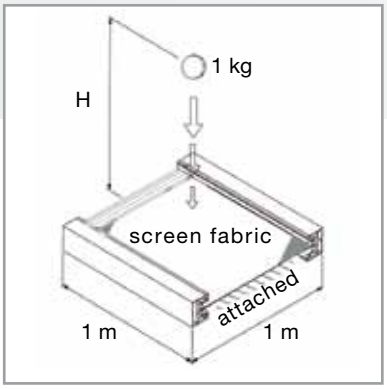

Collision test

Test: Ball (1 kg) dropped from different heights onto the screen

Result: Fabric tears apart before the zip-structure gets broken.

Fabric sample in test: Fibreglass Sergé®

Fabric selection

All recommended and commercially available fabrics for indoor and outdoor use.

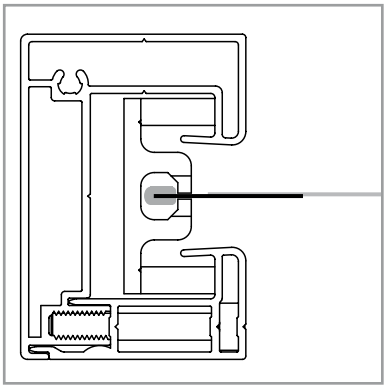

Product specifications

Fixscreen® 85

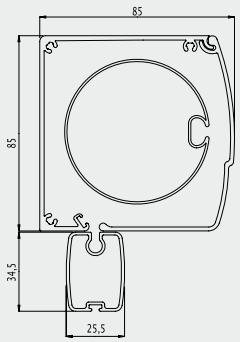

Side channel (S)

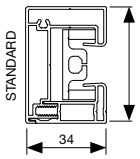

Coupling side channel (K)

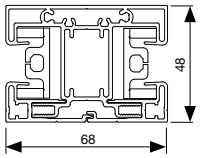

Fixscreen® 100^{EVO}

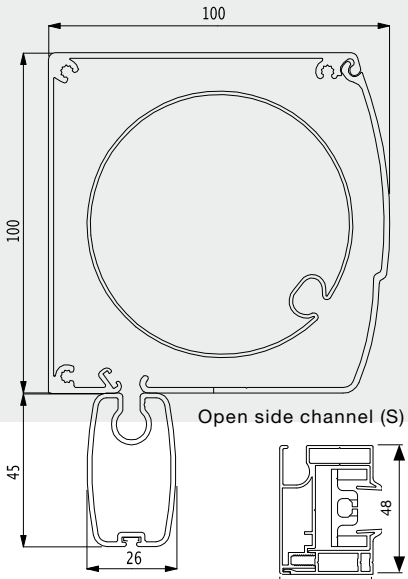

Open side channel (S)

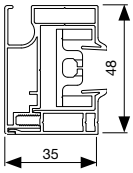

Closed side channel (G)

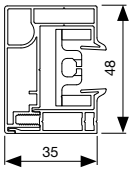

Coupling side channel (K)

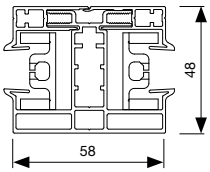

Fixscreen® 150

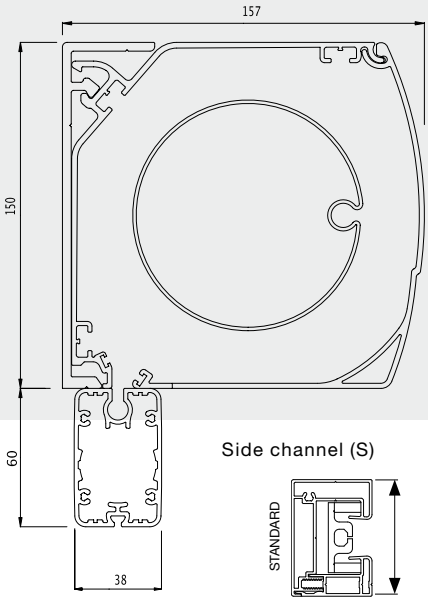

Side channel (S)

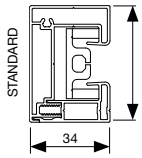

	Fixscreen® 85	Fixscreen® 100^{EVO}	Fixscreen® 150
General			
Material	EN AW-6063 T66		
Powder coating	60 - 80 micron		
Anodisation	20 micron		
Dimensions (mm)	W x H	W x H	W x H
Headbox	85 x 85	100 x 100	157 x 150
Bottom bar	25.5 x 34.5	26 x 45	38 x 60
Side channels	34 x 48	35 x 48	34 x 48
Coupling side channel	68 x 48	58 x 48	-
Maximum	2500 x 1800	4000 x 2700 3000 x 3500	6000 x 3400 3200 x 6000
Max. 2-part coupled (electrical only)	5000 x 1800	6000 x 2700	not joinable
Operation			
Manual	yes	yes	no
Electrical	yes	yes	yes
Connect&Go	no	yes	no
Installation method	(see p. 11 & 12)		
Installation method 1	possible	possible	possible
Installation method 4	possible	possible	not possible
Installation method 5	possible	possible	possible
Installation method 6	possible	possible	possible
Installation method 7	not possible	possible	not possible

Subject to technical changes.

Fixscreen® 100^{EVO}

The screen headbox

The box is constructed of extruded aluminium profiles.
The ends have side consoles that support the roll-up mechanism and are equipped with pins to slide the box onto the side channels.
The box is closed by means of a rounded front profile that hinges into the box and can be disassembled.

Box material:
Aluminium extrusion profile, alloy EN AW-6063 T66
Surface treatment: Anodised, 20 micron
Powder coating in RAL colours, 60-80 micron

Side console material:

Fixscreen® 85:	ASA Available in 4 standard colours: white, grey, cream & black
Fixscreen® 100^{EVO} & 150:	Aluminium Powder coating in RAL colours, 60-80 micron

Fixscreen® 100

Fabric roll

The fabric roller barrel with groove is made of steel and has a unique sunken fabric groove to limit the impression of the fabric loop. That will strongly reduce the horizontal line formation in the fabric.
The endpieces of the fabric roller barrel are conical to compensate for the thicker ends of the zip when it is rolled up: patented technology!

Material: Steel

Fixscreen® 100^{EVO}

The bottom bar

The bottom bar, made of extruded aluminium, is solid and is made heavier with a round bar of galvanised steel. That is covered by PE foam to prevent contact between the aluminium and steel.
For a perfect connection with the sill, the bottom bar has a plastic darkening strip.

Material: Aluminium extrusion profile, alloy EN AW-6063 T66
Surface treatment: Anodised, 20 micron
Powder coating in RAL colours, 60-80 micron

Fixscreen® 100^{EVO}

The side channel

The side channel and the coupling side channel are made of extruded aluminium.
The side channel is in two parts; the coupling side channel comes in three parts.
They are both pre-drilled for easy assembly. No screws are visible at the front.
The internal guide is made of HPVC with neoprene buffer zones that are 60 mm long to compensate for wind gusts. The zip is slid into this internal plastic guide and the fabric is held fast.
Sufficient tolerance has been provided between the fabric, the aluminium side channel and the internal guide to guarantee smooth use.
The side channels of the Fixscreen® 100^{EVO} have an extra channel to conceal the cable!

Material of the exterior side channel:
Aluminium extrusion profile, alloy EN AW-6063 T66
Surface treatment: Anodised, 20 micron
Powder coating in RAL colours, 60-80 micron

Fixscreen® references

The installation

When the Fixscreen® was developed, user friendliness and easy installation were made priorities.
The box is self-supporting and is installed on the side channels.

Fixscreen® 85 & Fixscreen® 150

There are **4** installation methods:
→ towards disassembly fabric roller barrel with fabric and motor.

Installation method 1:

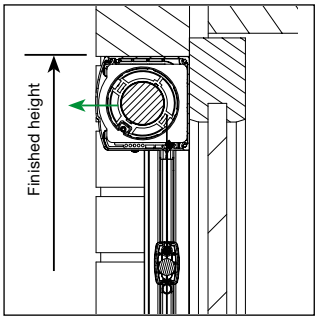

Surface-mounted, outside, in front of the window

Installation method 4:
Only for Fixscreen® 85
Interior to be finished by a carpenter

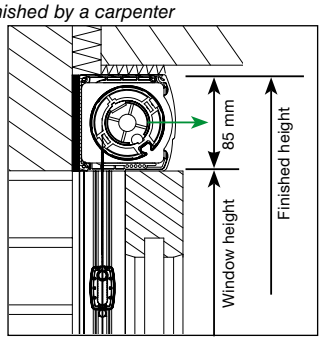

Hidden installation, reversed box, on top of the window with box, **without front cover**

Installation method 5:
Interior to be finished by a carpenter

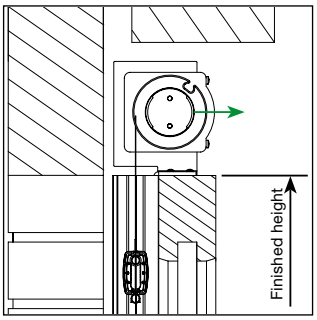

Hidden installation, with brackets, **without box**

Installation method 6:

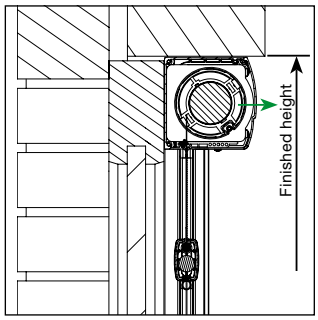

Surface-mounted, inside, in front of the window

Standard side channel (S)

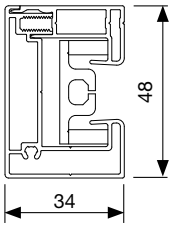

Coupling side channel (K)

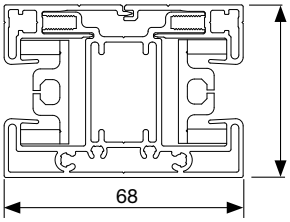

		SIDE CHANNELS	
		S	K
FIXSCREEN® 85	IM1	STANDARD (ST)	x
	IM4	STANDARD (ST)	x
	IM5	STANDARD (ST)	x
	IM6	STANDARD (ST)	x
FIXSCREEN® 150	IM1	STANDARD (ST)	n/a
	IM5	STANDARD (ST)	n/a
	IM6	STANDARD (ST)	n/a

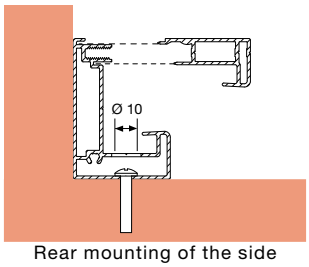

Rear mounting of the side channel Fixscreen® 85 & 150

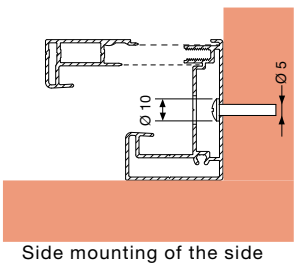

Side mounting of the side channel Fixscreen® 85 & 150

Fixscreen® 100*EVO*

There are **5** installation methods possibilities:

→ towards disassembly fabric roller barrel with fabric and motor.

Installation method 1:

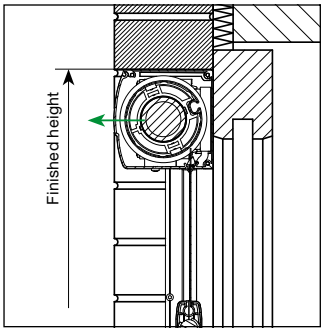

Surface-mounted, outside, in front of the window

Installation method 4:

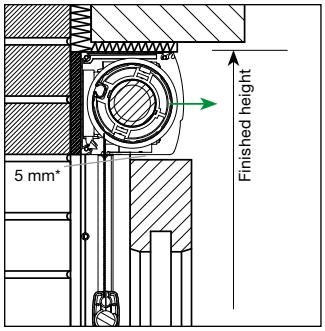

Hidden installation, reversed box, on top of the window with box, **without front cover**

* 5 mm extra between window height and bottom of Fixscreen® box

Installation method 5:

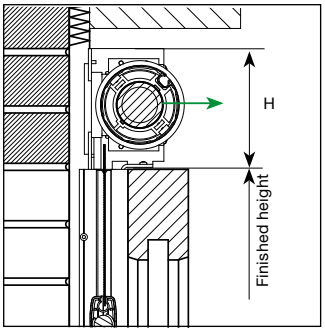

Hidden installation, with brackets, **without box**

Installation method 6:

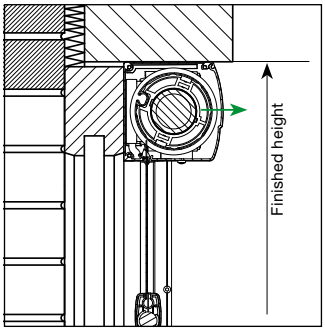

Surface-mounted, inside, in front of the window

Installation method 7: NEW!

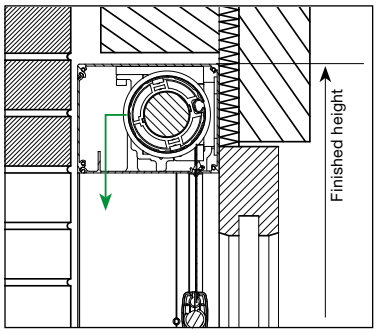

Hidden installation, in front/above the window

		SIDE CHANNELS			
		S	G	K	D
FIXSCREEN® 100	**IM1**	STANDARD	x	x	
	IM4	STANDARD	x	x	
	IM5	STANDARD	x	x	
	IM6	STANDARD	x	x	
	IM7	x*	x*	x	STANDARD

open side channel (S) *

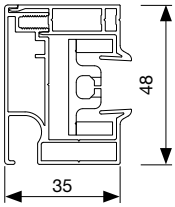

closed side channel (G) *

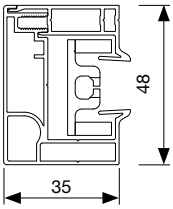

Coupling side channel (K)

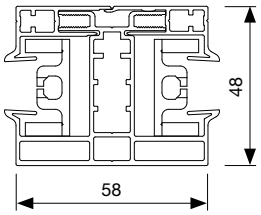

side channel:
deep side channel (D)

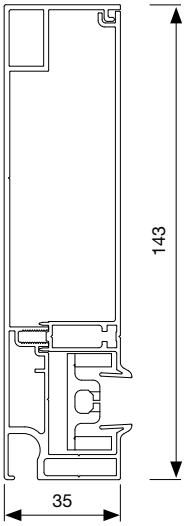

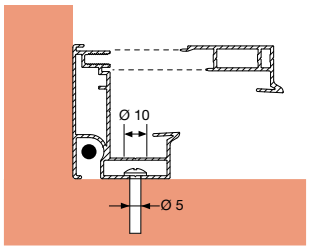

Rear mounting of the side channel
Fixscreen® 100*EVO*

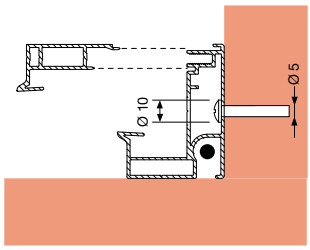

Side mounting of the side channel
Fixscreen® 100*EVO*

Methods of operation

Throughput & position

The location of the throughput depends on the choice of method of operation.
The operating mechanism can be positioned on the left or right, at the installer's discretion.

R & L:	Position right or left
A & B:	Throughput crank and motor cable
D & E:	Throughput crank
F, G, H, I & J:	Throughput motor cable
K:	Throughput motor cable in side channel

Fixscreen® 85

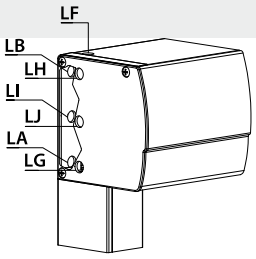

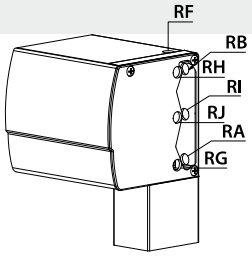

Fixscreen® 100*EVO*

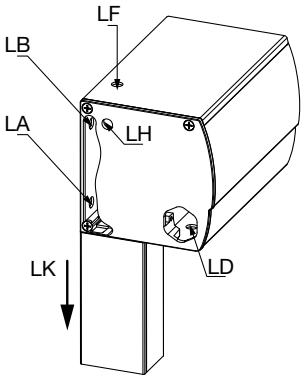

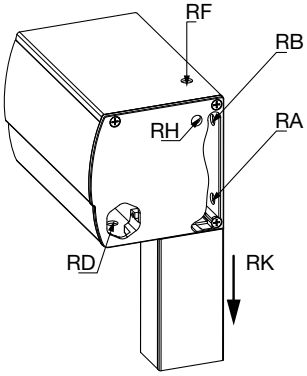

Fixscreen® 150

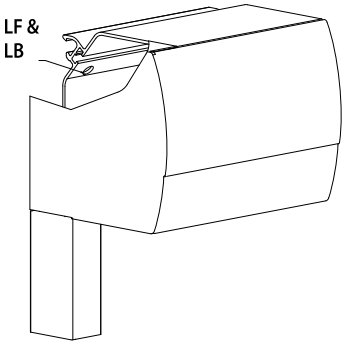

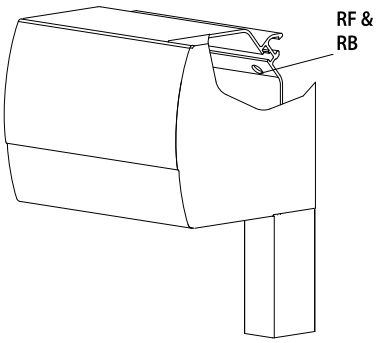

Fixed crank

Removable crank (Tulipe)

Somfy® motor: radio controlled

Connect&Go technology

For manual operation, you have a choice of:

- A fixed crank
- A removable crank

For electrical operation, you have a choice of:

- Somfy, mechanical motor
- Somfy, electronic WT motor:
  - only for Fixscreen® 100^{EVO} up to a maximum finished height of 2700 mm
- Somfy, radio-controlled motor
- Somfy, IO - Homecontrol powered motor:
  - only for Fixscreen® 100^{EVO} up to a maximum finished height of 2700 mm

Connect & Go - technology

The Fixscreen® 100^{EVO} has the new and revolutionary Connect& Go technology! This technology simplifies

- installing and removing of the fabric roller barrel
- replacing the fabric
- replacing the motor
- securing the headbox

This patented Connect&Go technology is a water tight, electrical connection with CE certification:

EC declaration of conformity

RENSON® Sunprotection-Screens NV/SA
Kalkhoevestraat 45
8790 Waregem • Belgium

EC DECLARATION OF COMPLIANCE

RE: FIXSCREEN® 100 ^{EVO}

Brand: RENSON® Sunprotection-Screens NV/SA
Type: MS1 - MS4 - MS5 - MS6 - MS7

The undersigned, Mr Paul Renson, authorised by RENSON® Sunprotection-Screens NV/SA hereby declares that the aforementioned machine, if installed, maintained and use in accordance with the enclosed instructions and the rules of good practice, is in compliance with the following EEC directives:

- the machines directive 2006/42/EC
- the low-tension directive 2006/95/EC
- he EMC directive 2004/108/EC

Date: 21/03/2011

Name: Paul Renson,

Signature:

Reference:
RAP VV/GDB-20100927-1 certificate,
RAP DO/GDB-20110318-1 certificate
RAP DO/GDB-20110321-1 certificate
issued by J. VAN HEMELEN, Kortrijk, Belgium

Extra

The electrical contract work includes the necessary power connections up to the relay boxes using a wiring lay-out specified by the supplier. Wires will run between the relays and each motor, the control switches and equipment as well as the measuring instruments. The electrician will also install a distribution box in which the manufacturer of the sun protecting screen can also directly connect the motor cable later. The motor cable can be connected directly without a distribution box if the motor cable is long enough.

Technical possibilities

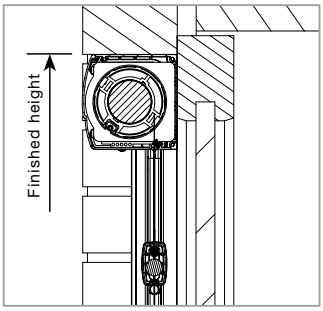

Installation method 1:
Manual

Installation method 1:
Electrical operation

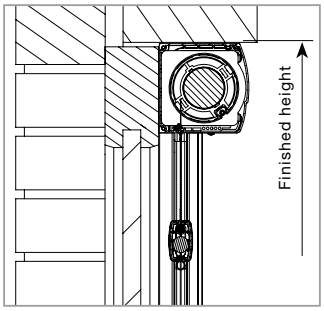

Installation method 6:
Manual

Installation method 6:
Electrical operation

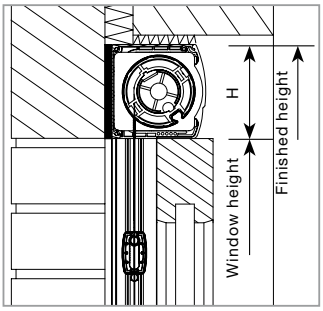

Installation method 4:
Electrical operation

Fixscreen® 85

- ■ Installation method 1 & 6, manual: minimum width 600 mm, not joinable.
- ▲ Installation method 1 & 6, electrical operation: minimum width 600 mm, 2-parts joinable up to 5000 mm.
- ▬ Installation method 4, electrical operation: minimum width 600 mm, 2-parts joinable up to 5000 mm.
- ● Installation method 5, electrical operation: minimum width 600 mm, 2-parts joinable up to 5000 mm. (Bracket 120 mm)

Height (m x m)	Width 1,00	1,20	1,40	1,60	1,80	2,00	2,20	2,40	2,50
1,00	■▲ ▬●	■▲ ▬●	■▲ ▬●	■▲ ▬●	■▲ ▬●	▬▲ ▬●	▬▲ ▬●	▬▲ ▬●	▬▲ ▬●
1,20	■▲ ▬●	■▲ ▬●	■▲ ▬●	■▲ ▬●	■▲ ▬●	▬▲ ▬●	▬▲ ▬●	▬▲ ▬●	▬▲ ▬●
1,40	■▲ ▬●	■▲ ▬●	■▲ ▬●	■▲ ▬●	■▲ ▬●	▬▲ ▬●	▬▲ ▬●	▬▲ ▬●	▬▲ ▬●
1,60	■▲ ▬●	■▲ ▬●	■▲ ▬●	■▲ ▬●	■▲ ▬●	▬▲ ▬●	▬▲ ▬●	▬▲ ▬●	▬▲ ▬●
1,80	■▲ ▬●	■▲ ▬●	■▲ ▬●	■▲ ▬●	■▲ ▬●	▬▲ ▬●	▬▲ ▬●	▬▲ ▬●	▬▲ ▬●

Tables subject to technical changes.

Fixscreen® 100*EVO*

- ■ Installation method 1 & 6, manual: minimum width 600 mm, not connectable.
- ▲ Installation method 1 & 6, electrical operation: minimum width 795 mm, 2-parts joinable up to 6000 x 2700 mm (W x H).
- ▬ Installation method 4, electrical operation: minimum width 795 mm, 2-parts joinable up to 6000 x 2700 mm (W x H).
- ● Installation method 5, electrical operation: minimum width 795 mm, 2-parts joinable up to 6000 x 2700 mm (W x H). (bracket 120 mm)
- ★ Installation method 7, electrical operation: minimum width 795 mm, 2-parts joinable up to 6000 x 2700 mm (W x H).

Height (m x m)	Width 1,00	1,20	1,40	1,60	1,80	2,00	2,20	2,40	2,60	2,80	3,00	3,20	3,40	3,60	3,80	4,00
1,00	■▲ ▬● ★	■▲ ▬● ★	■▲ ▬● ★	■▲ ▬● ★	■▲ ▬● ★	★▲ ▬●	★▲ ▬●	★▲ ▬●	★▲ ▬●	★▲ ▬●	★▲ ▬●	★▲ ▬●	★▲ ▬●	★▲ ▬●	★▲ ▬●	★▲ ▬●
1,20	■▲ ▬● ★	■▲ ▬● ★	■▲ ▬● ★	■▲ ▬● ★	■▲ ▬● ★	★▲ ▬●	★▲ ▬●	★▲ ▬●	★▲ ▬●	★▲ ▬●	★▲ ▬●	★▲ ▬●	★▲ ▬●	★▲ ▬●	★▲ ▬●	★▲ ▬●
1,40	■▲ ▬● ★	■▲ ▬● ★	■▲ ▬● ★	■▲ ▬● ★	★▲ ▬●	★▲ ▬●	★▲ ▬●	★▲ ▬●	★▲ ▬●	★▲ ▬●	★▲ ▬●	★▲ ▬●	★▲ ▬●	★▲ ▬●	★▲ ▬●	★▲ ▬●
1,60	■▲ ▬● ★	■▲ ▬● ★	■▲ ▬● ★	■▲ ▬● ★	★▲ ▬●	★▲ ▬●	★▲ ▬●	★▲ ▬●	★▲ ▬●	★▲ ▬●	★▲ ▬●	★▲ ▬●	★▲ ▬●	★▲ ▬●	★▲ ▬●	★▲ ▬●
1,80	■▲ ▬● ★	■▲ ▬● ★	■▲ ▬● ★	■▲ ▬● ★	★▲ ▬●	★▲ ▬●	★▲ ▬●	★▲ ▬●	★▲ ▬●	★▲ ▬●	★▲ ▬●	★▲ ▬●	★▲ ▬●	★▲ ▬●	★▲ ▬●	★▲ ▬●
2,00	■▲ ▬● ★	■▲ ▬● ★	★▲ ▬●	★▲ ▬●	★▲ ▬●	★▲ ▬●	★▲ ▬●	★▲ ▬●	★▲ ▬●	★▲ ▬●	★▲ ▬●	★▲ ▬●	★▲ ▬●	★▲ ▬●	★▲ ▬●	★▲ ▬●
2,20	■▲ ▬● ★	■▲ ▬● ★	★▲ ▬●	★▲ ▬●	★▲ ▬●	★▲ ▬●	★▲ ▬●	★▲ ▬●	★▲ ▬●	★▲ ▬●	★▲ ▬●	★▲ ▬●	★▲ ▬●	★▲ ▬●	★▲ ▬●	★▲ ▬●
2,40	■▲ ▬● ★	★▲ ▬●	★▲ ▬●	★▲ ▬●	★▲ ▬●	★▲ ▬●	★▲ ▬●	★▲ ▬●	★▲ ▬●	★▲ ▬●	★▲ ▬●	★▲ ▬●	★▲ ▬●	★▲ ▬●	★▲ ▬●	★▲ ▬●
2,60	■▲ ▬● ★	★▲ ▬●	★▲ ▬●	★▲ ▬●	★▲ ▬●	★▲ ▬●	★▲ ▬●	★▲ ▬●	★▲ ▬●	★▲ ▬●	★▲ ▬●	★▲ ▬●	★▲ ▬●	★▲ ▬●	★▲ ▬●	★▲ ▬●
2,70	■▲ ▬● ★	★▲ ▬●	★▲ ▬●	★▲ ▬●	★▲ ▬●	★▲ ▬●	★▲ ▬●	★▲ ▬●	★▲ ▬●	★▲ ▬●	★▲ ▬●	★▲ ▬●	★▲ ▬●	★▲ ▬●	★▲ ▬●	★▲ ▬●
2,80	★▲ ▬●	★▲ ▬●	★▲ ▬●	★▲ ▬●	★▲ ▬●	★▲ ▬●	★▲ ▬●	★▲ ▬●	★▲ ▬●	★▲ ▬●	★▲ ▬●	●	●	●	●	●
3,00	★▲ ▬●	★▲ ▬●	★▲ ▬●	★▲ ▬●	★▲ ▬●	★▲ ▬●	★▲ ▬●	★▲ ▬●	★▲ ▬●	★▲ ▬●	★▲ ▬●	●	●	●	●	●
3,20	★▲ ▬●	★▲ ▬●	★▲ ▬●	★▲ ▬●	★▲ ▬●	★▲ ▬●	★▲ ▬●	★▲ ▬●	★▲ ▬●	★▲ ▬●	★▲ ▬●					
3,40	★▲ ▬●	★▲ ▬●	★▲ ▬●	★▲ ▬●	★▲ ▬●	★▲ ▬●	★▲ ▬●	★▲ ▬●	★▲ ▬●	★▲ ▬●	★▲ ▬●					
3,50	★▲ ▬●	★▲ ▬●	★▲ ▬●	★▲ ▬●	★▲ ▬●	★▲ ▬●	★▲ ▬●	★▲ ▬●	★▲ ▬●	★▲ ▬●	★▲ ▬●					

Tables subject to technical changes.

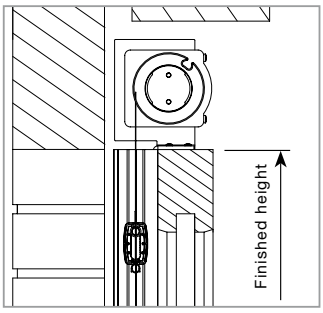

Fixscreen® 85:
bracket 120 mm

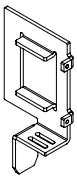

Fixscreen® 100^{EVO}:
bracket 120 mm

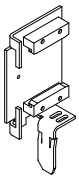

Fixscreen® 150:
bracket 150 mm

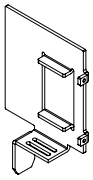

Installation method 5:
Electrical operation

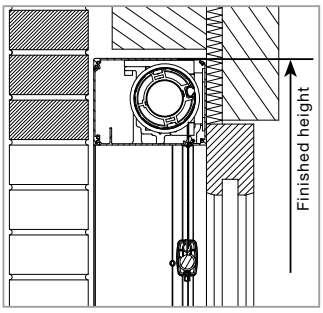

Installation method 7:
Electrical operation

Fixscreen® 150

▲ Installation method 1 & 6, electrical operation: minimum width 840 mm, not joinable.
● Installation method 5, electrical operation: minimum width 840 mm, not joinable.
(Bracket 150 mm, bottom bar Fixscreen® 150)
between 4000 & 6000 mm in width: extra attachments required

Height \ Width (m x m)	1,00	1,20	1,40	1,60	1,80	2,00	2,20	2,40	2,60	2,80	3,00	3,20	3,40	3,60	3,80	4,00	4,20	4,40	4,60	4,80	5,00	5,20	5,40	5,60	5,80	6,00
1,00	▲●	▲●	▲●	▲●	▲●	▲●	▲●	▲●	▲●	▲●	▲●	▲●	▲●	▲●	▲●	▲●	▲●	▲●	▲●	▲●	▲●	▲●	▲●	▲●	▲●	▲●
1,20	▲●	▲●	▲●	▲●	▲●	▲●	▲●	▲●	▲●	▲●	▲●	▲●	▲●	▲●	▲●	▲●	▲●	▲●	▲●	▲●	▲●	▲●	▲●	▲●	▲●	▲●
1,40	▲●	▲●	▲●	▲●	▲●	▲●	▲●	▲●	▲●	▲●	▲●	▲●	▲●	▲●	▲●	▲●	▲●	▲●	▲●	▲●	▲●	▲●	▲●	▲●	▲●	▲●
1,60	▲●	▲●	▲●	▲●	▲●	▲●	▲●	▲●	▲●	▲●	▲●	▲●	▲●	▲●	▲●	▲●	▲●	▲●	▲●	▲●	▲●	▲●	▲●	▲●	▲●	▲●
1,80	▲●	▲●	▲●	▲●	▲●	▲●	▲●	▲●	▲●	▲●	▲●	▲●	▲●	▲●	▲●	▲●	▲●	▲●	▲●	▲●	▲●	▲●	▲●	▲●	▲●	▲●
2,00	▲●	▲●	▲●	▲●	▲●	▲●	▲●	▲●	▲●	▲●	▲●	▲●	▲●	▲●	▲●	▲●	▲●	▲●	▲●	▲●	▲●	▲●	▲●	▲●	▲●	▲●
2,20	▲●	▲●	▲●	▲●	▲●	▲●	▲●	▲●	▲●	▲●	▲●	▲●	▲●	▲●	▲●	▲●	▲●	▲●	▲●	▲●	▲●	▲●	▲●	▲●	▲●	▲●
2,40	▲●	▲●	▲●	▲●	▲●	▲●	▲●	▲●	▲●	▲●	▲●	▲●	▲●	▲●	▲●	▲●	▲●	▲●	▲●	▲●	▲●	▲●	▲●	▲●	▲●	▲●
2,60	▲●	▲●	▲●	▲●	▲●	▲●	▲●	▲●	▲●	▲●	▲●	▲●	▲●	▲●	▲●	▲●	▲●	▲●	▲●	▲●	▲●	▲●	▲●	▲●	▲●	▲●
2,80	▲●	▲●	▲●	▲●	▲●	▲●	▲●	▲●	▲●	▲●	▲●	▲●	▲●	▲●	▲●	▲●	▲●	▲●	▲●	▲●	▲●	▲●	▲●	▲●	▲●	▲●
3,00	▲●	▲●	▲●	▲●	▲●	▲●	▲●	▲●	▲●	▲●	▲●	▲●	▲●	▲●	▲●	▲●	▲●	▲●	▲●	▲●	▲●	▲●	▲●	▲●	▲●	▲●
3,20	▲●	▲●	▲●	▲●	▲●	▲●	▲●	▲●	▲●	▲●	▲●	▲●	▲●	▲●	▲●	▲●	▲●	▲●	▲●	▲●	▲●	▲●	▲●	▲●	▲●	▲●
3,40	▲●	▲●	▲●	▲●	▲●	▲●	▲●	▲●	▲●	▲●	▲●	▲●	▲●	▲●	▲●	▲●	▲●	▲●	▲●	▲●	▲●	▲●	▲●	▲●	▲●	▲●
3,60	▲●	▲●	▲●	▲●	▲●	▲●	▲●	▲●	▲●	▲●	▲●	▲●	▲●	▲●	▲●	▲●	▲●	▲●	▲●	▲●	▲●	▲●				
3,80	▲●	▲●	▲●	▲●	▲●	▲●	▲●	▲●	▲●	▲●	▲●	▲●	▲●	▲●	▲●	▲●	▲●	▲●	▲●	▲●	▲●	▲●				
4,00	▲●	▲●	▲●	▲●	▲●	▲●	▲●	▲●	▲●	▲●	▲●	▲●	▲●	▲●	▲●	▲●	▲●	▲●	▲●	▲●	▲●	▲●				
4,20	▲●	▲●	▲●	▲●	▲●	▲●	▲●	▲●	▲●	▲●	▲●	▲●	▲●	▲●	▲●	▲●	▲●	▲●	▲●	▲●	▲●					
4,40	▲●	▲●	▲●	▲●	▲●	▲●	▲●	▲●	▲●	▲●	▲●	▲●	▲●	▲●	▲●	▲●	▲●	▲●	▲●	▲●						
4,60	▲●	▲●	▲●	▲●	▲●	▲●	▲●	▲●	▲●	▲●	▲●	▲●	▲●	▲●	▲●	▲●	▲●	▲●	▲●	▲●						
4,80	▲●	▲●	▲●	▲●	▲●	▲●	▲●	▲●	▲●	▲●	▲●	▲●	▲●	▲●	▲●	▲●	▲●	▲●	▲●							
5,00	▲●	▲●	▲●	▲●	▲●	▲●	▲●	▲●	▲●	▲●	▲●	▲●	▲●	▲●	▲●	▲●	▲●	▲●								
5,20	▲●	▲●	▲●	▲●	▲●	▲●	▲●	▲●	▲●	▲●	▲●	▲●	▲●	▲●	▲●	▲●										
5,40	▲●	▲●	▲●	▲●	▲●	▲●	▲●	▲●	▲●	▲●	▲●	▲●	▲●	▲●	▲●											
5,60	▲●	▲●	▲●	▲●	▲●	▲●	▲●	▲●	▲●	▲●	▲●	▲●	▲●	▲●												
5,80	▲●	▲●	▲●	▲●	▲●	▲●	▲●	▲●	▲●	▲●	▲●	▲●	▲●													
6,00	▲●	▲●	▲●	▲●	▲●	▲●	▲●	▲●	▲●	▲●	▲●	▲●														

Tables subject to technical changes.

Types of fabric

Fibreglass fabric

This screen fabric is woven from fibreglass threads with a PVC coating. Fabric made of fibreglass retains its shape, does not suffer from moisture or heat, will not rot and is colour fast.
The sides of the finished fabric are reinforced with a transparent band that is 9 mm wide and 0.3 mm thick. The upper and lower side have a welded seam through which a screen cord has been threaded.
At heights greater than 2.7 m, the fabric also has a horizontal welding seam.

Fibreglass fabric sampler

Soltis® polyester fabric

This type of fabric is made of finely meshed tissue with a fire-retardant PVC coating (fire classification M1/M2, depending on the colour) using the précontraint method. That means that the warp and weft of the polyester tissue is pre-stretched before and during the coating process. That creates an extremely stable and firm fabric, resulting in a long lifespan.
At heights greater than 1.77 m, the Soltis® 86 & 92 fabrics also have a horizontal welding seam.
At heights greater than 2.67 m, the Soltis® 93 fabric also has a horizontal welding seam.

Soltis® fabric sampler

Light-block fibreglass fabric

Technical fabric of fibreglass threads (42%) with a blackout PVC coating (58%).
Caution! Only for use on the interior of the building.
At heights greater than 1.40 m, the fabric also has a horizontal welding seam.

Light-block Soltis® B92 polyester fabric

Fine polyester mesh fabric with a fire-retardant PVC coating using the précontraint method. The back side also has a blackout PVC coating.
Soltis® B92 is 100% recyclable.
The blackout polyester fabric can be used inside and outside the building.
For the outside, there is a restriction in that only the Fixscreen® 100^{EVO} and the Fixscreen® 150 with a minimum width of 1 m up to a maximum width of 2 m and a maximum height of 2.7 m can be used.
At heights greater than 1.70 m, the Soltis® B92 fabric has a horizontal welding seam.

Light-block fabric sampler

Insect screen

Fixscreen® 85 & 100^{EVO} can also have mosquito netting in the following colours:

ISR Grey

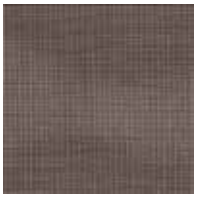

ISR Charcoal

ISR Zebra

At heights greater than 2.40 m, the mosquito netting has a horizontal welding seam.

For more information: see our “Screen fabric types” technology brochure.

Fixscreen® references

Diksmuide Apartments, Buro II and Arch. Gino Weyne

Volvo garage Diksmuide, Arch. Stefaan Hoet

Maintenance

The system requires little maintenance, but we do advise the following to ensure years of sun-protection enjoyment.

- If the fabric gets wet in an unexpected shower, you can roll it up without problems and then roll it out later to allow it to dry.
  Do not allow the fabric to stay rolled up wet for longer than three days; that will help prevent mould and stains.
- Before cleaning, remove loose dirt with a brush or vacuum cleaner.
  You can then remove the remaining dirt with a cleaning product and warm water (special cleaning products are available from the installer).
  Always rinse the fabric after cleaning.
  Avoid cleaning in full sunlight: if the soapy water dries quickly, it can leave stains on the fabric.
  Do not use abrasive products to clean.
- The hinges and moving parts should be lubricated at least annually.
  A dry lubricant (Teflon) should be used to do so.
- As the manufacturer, we recommend having a technical inspection of your installation carried out regularly by the installer.
  - Annually for utilities buildings.
  - every 4 years for residential sun protection.
- Always use original parts for maintenance.
- See our user manual for more information.

Guarantee

All of the materials we use are of high quality and have been modified for the purposes used.
As manufacturer, we guarantee:
- 5 year guarantee on all defects arising from normal use and maintenance.
- 7 year guarantee on the Fixscreen® technology*:
  - zip remains in side channel
  - optimal adhesion of zip to fabric

The warranty covers the delivery of replacement parts, assembly on site by an installer (possibly assisted by a technical employee from RENSON® Sunprotection-Screens) or a complete revision of the system by the manufacturer at our location.
The assembly costs (travel + hourly rate) are not covered by this guarantee.

The guarantee period starts on the date of production and applies only to the product itself, and not to the installation of it.

The warranty can only apply if the product is used and maintained in accordance with the instructions contained in this manual. The guarantee lapses if the product is used incorrectly or abnormally.

When reporting a problem, please tell the installer the serial number.

See our guarantee terms and conditions.

1 January 2005

EC Declaration of Conformity

Manufac RENSON® Sunprotection-Screens
IZ 1 Flanders Field
Kalkhoevestraat 45
B-8790 Waregem
Belgium

The undersigned,

Hereby declares that the product:

"Fixscreen®, Outdoor Sun Protection System" with CE certification:

CE

RENSON® Sunprotection-Screens,
IZ 1 Flanders Field,
Kalkhoevestraat 45,
Waregem, B-8790

Is compliant with annex ZA.1 of the European standard EN13561:2004

EN 13561
Blind for external use
Conform wind class 3

Paul Renson,

Managing Director

Fixscreen® references

Fixscreen® references

RENSON® - YOUR PARTNER FOR VENTILATION AND SUN PROTECTION

Since 1909 RENSON ® has had an abundant history in innovation and experience therefore is profiling itself as the undisputed European market leader in natural ventilation and sun protection. Our Headquarters are located in a remarkable building in Waregem (Belgium). The building itself is a working example of our Healthy Building Concept® and functions as a prototype, exhibiting our technological expertise. In 2003 the building was nominated for the Belgian Building Award, crowned with the "Aluminium Environment Award", and in 2009 the building was crowned again with the "Green Good Design Award".

RENSON®'s mission is to continually develop, produce and sell unique and innovating products for natural ventilation and sun protection. Our main objective is to improve the living or working conditions for those using the buildings and to reduce their energy bills. RENSON® combines comfort and energy efficiency with architecture in order improve the health of the users.

RENSON® HAS IT ALL :

- Our multidisciplinary R&D department co-operates with leading European research organisations for a complete range of innovative concepts and products.
- Our automatic powder coating installation, anodisation unit, moulding centre, plastic injection moulding facilities, assembly department and warehouse are all positioned within an area of 75,000 m2. This type of vertical integration allows RENSON® to ensure the consistent quality of all its products.
- RENSON®'s headquarters, sales and marketing department and its production plant are located in Belgium, but we also have plants and offices in France and in the UK . RENSON® has sales representatives active all over Europe and has set up a network of distributors throughout the world. More than 65 employees are available to support and advise you on the spot; that is why we can offer you a more reliable back-up and in-depth follow-through than our competitors.
- The diversity and capability of our staff can guarantee the correct solution for each individual building project. The creation of valuable long-term relationships with construction specialists is our priority. We devote all of our creative resources into cost-efficient solutions, tailor-made for each ventilation and sun protection project.

© RENSON® Headquarters, Waregem, 2010

All rights reserved. No part of this publication may be reproduced, stored in an automated retrieval system or made available in any form or in any way, whether electronic or mechanical, including photocopying, recording or any other manner without the prior written permission of the author.

Conditional technical changes
The most recent edition of the brochure can be downloaded on **www.renson.eu**

RENSON® Fabrications LTD • Fairfax Units 1-5 • Bircholt Road • Parkwood Industrial Estate • Maidstone Kent ME15 9SF • Tel. 01622/754123 • Fax 01622/689478 • Fax 01622/689479 • info@rensonuk.net

RENSON®Sunprotection-ScreensNV•IZ1FlandersField•Kalkhoevestraat45•B-8790Waregem•Belgium
Tel. +32 (0)56 62 65 00 • Fax +32 (0)56 62 65 09 • info@rensonscreens.be • **www.renson.eu**

L2000441

RENSON®
VENTILATION
SUNPROTECTION

© L2000441 12/11 UK-Engels